4.5 Causes of a geyser dripping at the overflow:
- A faulty pressure-control valve ✓
- Faulty thermostat/Excessive heat build-up in the geyser ✓
- A faulty relief valve
- A faulty filter in the relief valve
- A faulty O-ring in the relief valve
- A faulty spring in the relief valve

ANY TWO OF THE ABOVE (2)

4.6 Water hammer/Hammering of the pipes ✓ (1)

4.7 4.7.1 Pressure-reducing valve ✓
PRV ✓ (2)

4.7.2 Pressure switch ✓
PS ✓ (2)

4.7.3 Non-return valve ✓
NRV ✓ (2)

4.8 T-WASTE JUNCTION WITH INSPECTION EYE

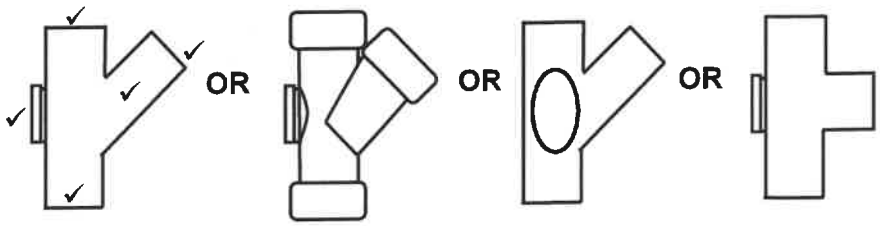

(5)

4.9 4.9.1 C ✓

4.9.2 A ✓

4.9.3 G ✓

4.9.4 F ✓

4.9.5 E ✓ (5)

4.10 Dezincification:
- Is the selective leaching (removal) of Zinc from copper alloys ✓
- Is an electrochemical reaction between zinc and water

ANY ONE OF THE ABOVE

Galvanic corrosion:
- Is an electrochemical process that takes place between two different metals or alloys ✓ (2)

DEPARTMENT OF BASIC EDUCATION
PRIVATE BAG X895, PRETORIA 0001
2023 -11- 23
APPROVED MARKING GUIDELINE
PUBLIC EXAMINATION

4.11 Galvanic corrosion can be prevented by:

- Electrically insulating the two metals(electrolysis) ✓
- Ensuring that there is no contact with electrolytes
- Applying an antioxidant paste
- Using metals with similar electrode potentials
- Connecting direct current to oppose the corrosive galvanic current

ANY ONE OF THE ABOVE (1)

[40]

DEPARTMENT OF BASIC EDUCATION
PRIVATE BAG X895, PRETORIA 0001
2023 -11- 23
APPROVED MARKING GUIDELINE
PUBLIC EXAMINATION

QUESTION 5: GRAPHICS AS MEANS OF COMMUNICATION, ROOF WORK AND STORM WATER (SPECIFIC)

5.1 5.1.1 Stop ends/End caps ✓ (1)

5.1.2 Fastener used to attach the downpipe to the wall:
- Holder bats ✓
- Downpipe clips

ANY ONE THE ABOVE (1)

5.1.3 Offset ✓ (1)

5.2 Installation of a galvanised mild steel gutter brackets:
- Mark off the position of the screws for the first gutter bracket ✓
- Measure the slope and mark the position of the screws at the opposite end of the fascia board ✓
- Snap a chalk line between the two points ✓
- Mark out evenly (not exceeding one meter) the positions of the brackets in between the marked points ✓
- Screw brackets onto the marked positions on the fascia board ✓ (5)

5.3

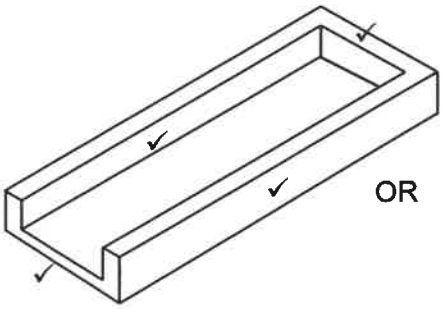

OR

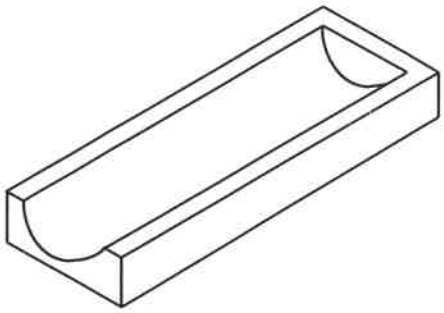

(4)

DEPARTMENT OF BASIC EDUCATION
PRIVATE BAG X895, PRETORIA 0001
2023 -11- 23
APPROVED MARKING GUIDELINE
PUBLIC EXAMINATION

5.4

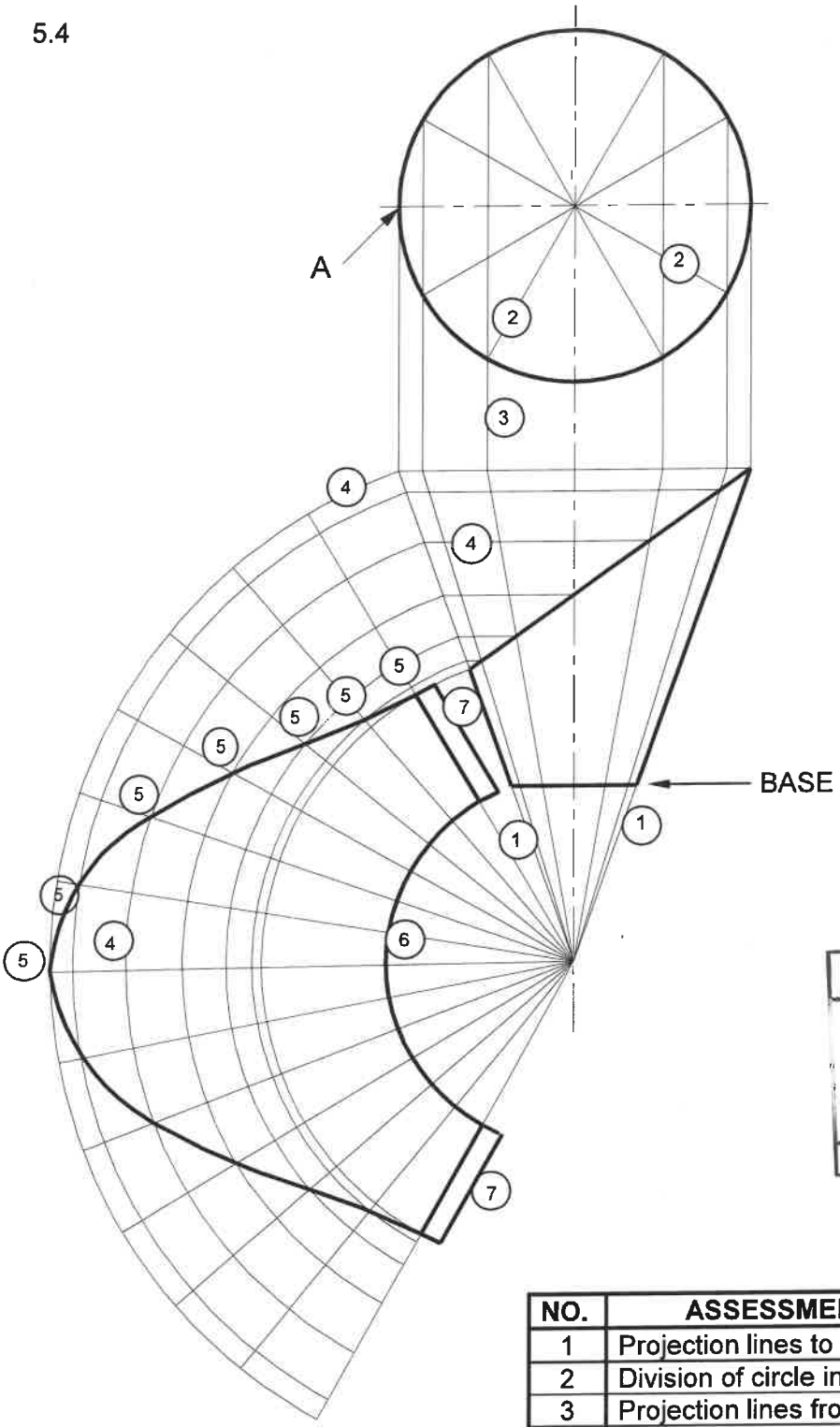

DEPARTMENT OF BASIC EDUCATION
PRIVATE BAG X895, PRETORIA 0001
2023 -11- 23
APPROVED MARKING GUIDELINE
PUBLIC EXAMINATION

NO.	ASSESSMENT CRITERIA	MARK
1	Projection lines to apex	2
2	Division of circle into 12 parts	2
3	Projection lines from circle	1
4	Construction lines and arcs from cone	3
5	Development of top of cone	7
6	Development of base of cone	1
7	3 mm seam on both sides	2
	TOTAL:	18

[30]

QUESTION 6: SEWERAGE, SANITARY FITTINGS AND JOINING (SPECIFIC)

6.1 Process of joining capillary elbow to copper pipes:
- Remove the debris with sanding paper/steel wool and apply flux ✓
- Insert pipe into elbow ✓
- Heat the pipe and elbow ✓
- Apply solder to the joint allowing the solder to fill around the joint ✓ (4)

6.2 Uses of the spring toggle fixer:
- Fixing brackets, timber and small frames against plasterboard ✓
- Fixing objects to hollow-core bricks ✓
- Fixing lights and chandeliers to the ceiling

ANY TWO OF THE ABOVE (2)

6.3 Cast iron pipes:
- Have superior strength when compared to other pipes ✓
- Is corrosion resistant ✓ (2)

6.4 6.4.1 Compressed air test ✓ (1)

6.4.2 Manometer ✓ (1)

6.4.3 Drain stopper/Stopper ✓ (1)

6.4.4 The compressed air test:
- Slide the stoppers into the pipes at all openings ✓
- Turn the wing nuts of the stoppers tightly so that they expand and seal the pipes ✓
- Air is now pumped into the system, until it reaches sufficient pressure ✓ (3)

6.4.5 There is a leak in the system. ✓ (1)

6.5 6.5.1 A manhole ramp should be constructed:
- When the ground slopes steeply to the connection point ✓
- Where the maximum gradient/fall/slope cannot be applied

ANY ONE OF THE ABOVE (1)

DEPARTMENT OF BASIC EDUCATION
PRIVATE BAG X895, PRETORIA 0001
2023 -11- 23
APPROVED MARKING GUIDELINE
PUBLIC EXAMINATION

6.5.2 The advantages of a manhole ramp:

- It acts as an intermediate to join two different drain levels ✓
- When a blockage occurs, the manhole ramp pressurises the blocked pipe further down the flow and temporarily stores the waste and effluent matter, which could flow horizontally into the manhole ✓
- Allows the maintaining of a constant slope in pipes against steep slopes by rapidly dropping to lower levels for short distances

ANY TWO OF THE ABOVE (2)

6.6

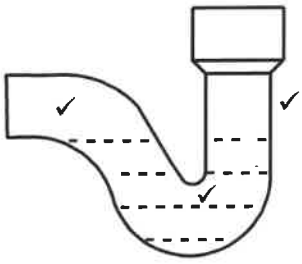

P-TRAP

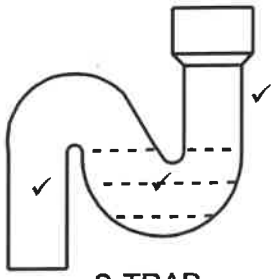

S-TRAP (6)

6.7

6.7	6.7.1	RE ✓	(1)
	6.7.2	Connect a 45°/135° bend to the sewer lines ✓	(1)
	6.7.3	C - Vent pipe/Ventilation pipe/VP/Vent valves/VV ✓	(1)
	6.7.4	Municipal connection ✓	(1)
	6.7.5	45°/135° ✓	(1)
	6.7.6	The branch pipe runs through/into the wall ✓	(1)

DEPARTMENT OF BASIC EDUCATION
PRIVATE BAG X895, PRETORIA 0001
2023 -11- 23
APPROVED MARKING GUIDELINE
PUBLIC EXAMINATION

6.8

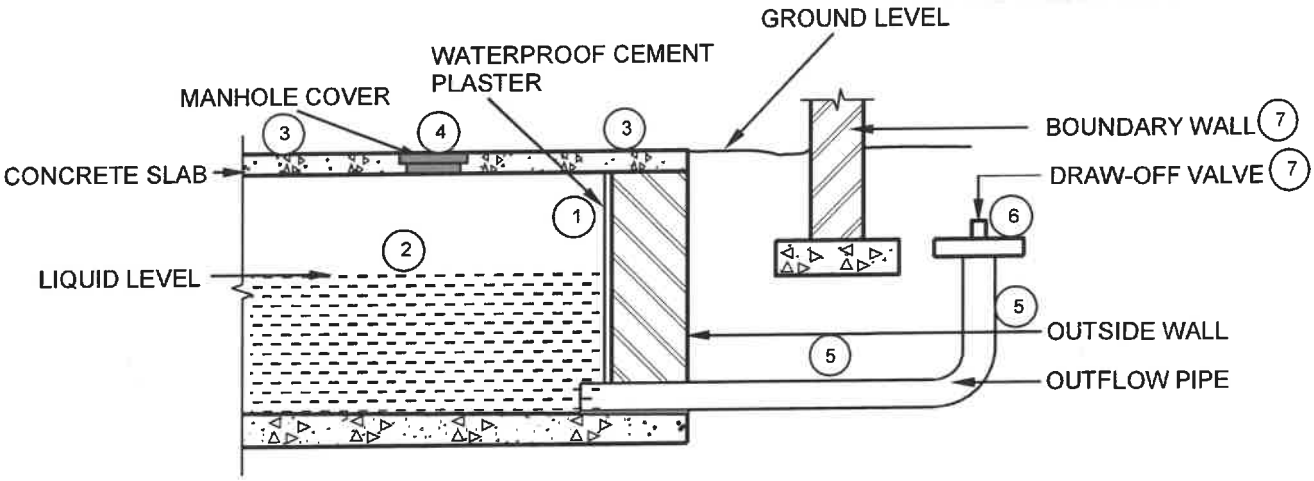

NO.	ASSESSMENT CRITERIA	MARK
1	Waterproof cement plaster	1
2	Liquid level	1
3	Upper concrete slab	2
4	Manhole cover	1
5	Outflow pipe	2
6	Draw-off valve	1
7	Any TWO labels	2
	TOTAL:	10

(10)
[40]

TOTAL: 200

DEPARTMENT OF BASIC EDUCATION
PRIVATE BAG X895, PRETORIA 0001
2023 -11- 23
APPROVED MARKING GUIDELINE
PUBLIC EXAMINATION

Copyright reserved